C3546-D15

STRUCTURE	STATION	SPAN	CHORDS	VERTICAL DIAGONAL	HORIZ DIAGONAL	STRUTS	CAMBER	ANCHOR BOLTS SIZE LT	ANCHOR BOLTS EMBED	ANCHOR BOLTS SIZE RT	ANCHOR BOLTS EMBED	LEFT UPRIGHT	RIGHT UPRIGHT	LEFT UPRIGHT DIAG & STRUT	RIGHT UPRIGHT DIAG & STRUT	SEAT	"A"	"B"	"C"	"D"	"E"	"F"	"G"	"H" LEFT	"H" RIGHT	CHORD SPLICE INFORMATION "J"	"K"	"L"	"M" LEFT	"M" RIGHT	"N" LEFT	"N" RIGHT	No OF SECTIONS	DESIGN SIGN AREA (ft²)	STUB SPLICE INFORMATION "T"	"U"	"V"	"W"	"X"
OH-12	414+73.64(EB)	89'-0	6.625 x .250	1.900 x .200	1.900 x .200	1.660 x .140	3	1½	3'-6	1¾	3'-6	12.750 x .250	14.000 x .250	3.500 x .188	3.500 x .188	LT-WT7x15 RT-WT6x13	23'-4½	33'-0¾	5'-6	1'-1½	3'-9	3'-3	⅝	1'-1½	1'-2	¼	1	6-1ø	1½	1¾	5/16	5/16	3	908.0	---	---	---	---	---
OH-22	3027+15.32(WB)	70'-0	4.500 x .188	1.660 x .140	1.660 x .140	1.315 x .133	2	1¼	3'-6	1¼	3'-6	8.625 x .188	8.625 x .188	2.375 x .154	2.375 x .154	WT6x13	27'-4½	28'-3½	4'-9	9	3'-9	3'-3	½	10½	10½	¼	¾	4-¾ø	1¼	1¼	5/16	5/16	2	313.0	2'-7	1¼	4	1¼	10½

NOTE: ALL PIPE SIZES ARE OUTSIDE DIAMETER

SCDOT
South Carolina Department of Transportation
ACCEPTED
AS NOTED
REVIEWED BY: John Egan 3/6/25
DATE

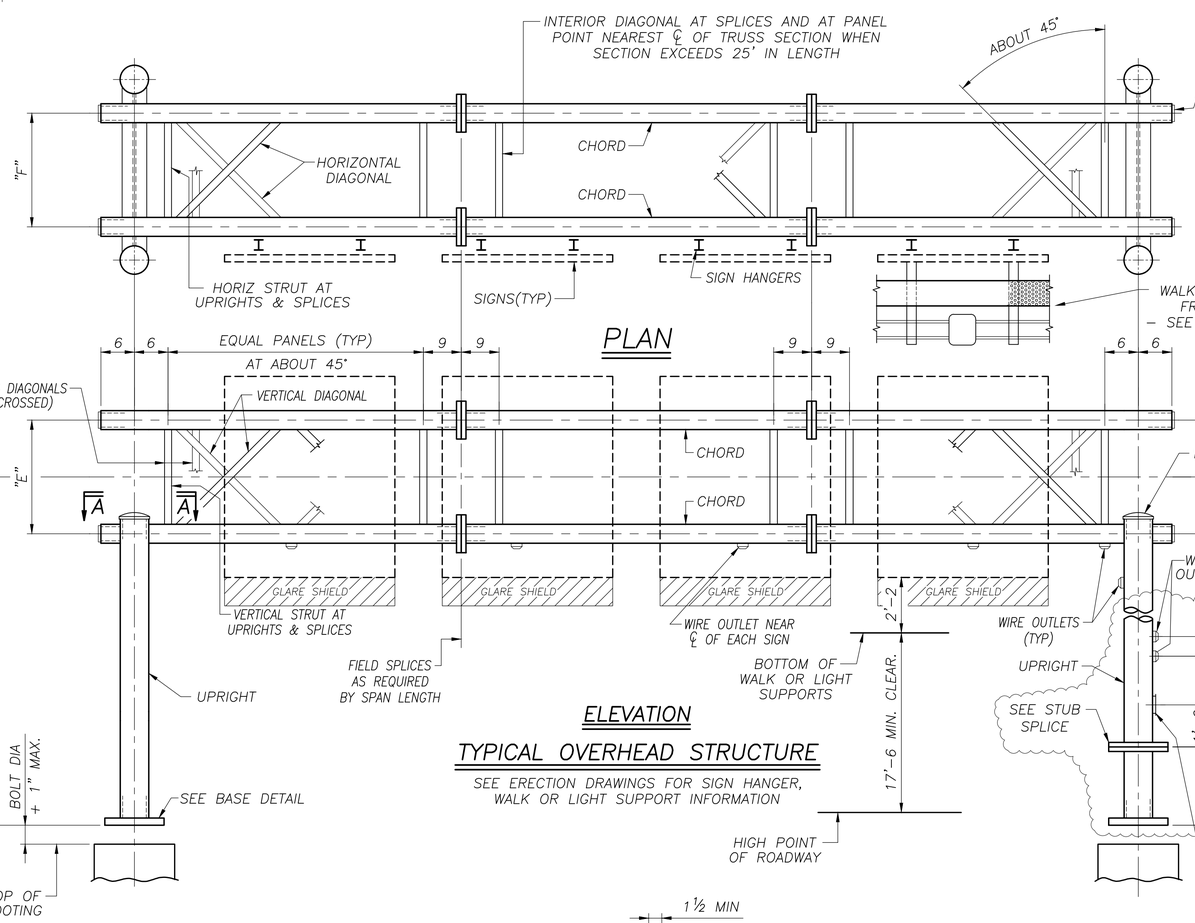

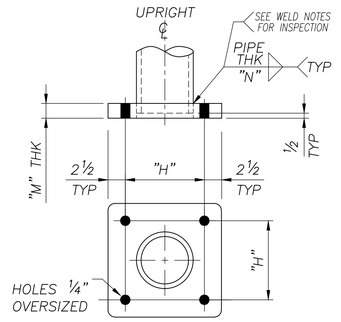

TYP BASE DETAIL

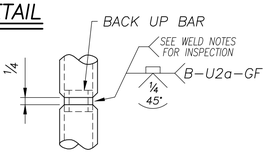

OPTIONAL SPLICE
(FOR WALL THK 5/16 OR GREATER ONLY)

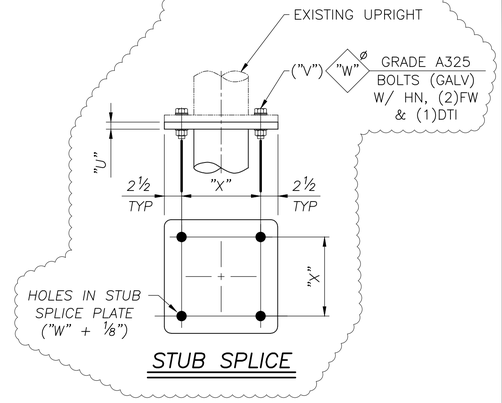

STUB SPLICE

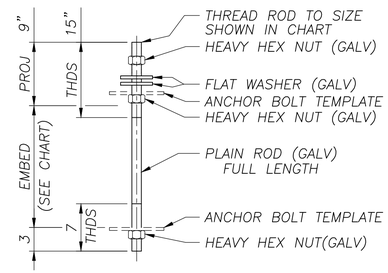

ANCHOR DETAIL

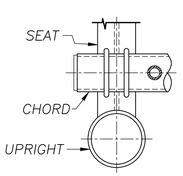

SECTION A-A

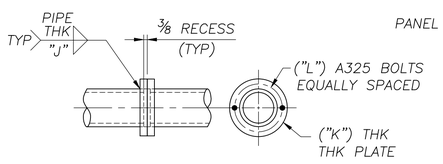

TYP SPLICE DETAIL

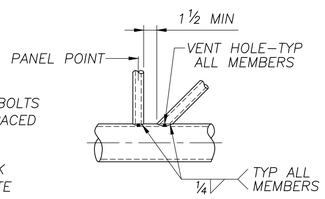

TYP DETAIL AT PANEL POINT

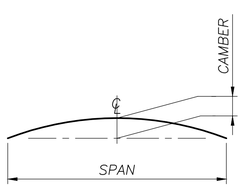

CAMBER DIAGRAM

NOTE:
SEE GENERAL NOTES DRAWING FOR MATERIAL SPECIFICATIONS, FOUNDATION AND STANDARD NOTES

GROUP 2

AASHTO 6th Edition Spec's

INFRASTRUCTURE CONSULTING & ENGINEERING
SHOP DRAWING REVIEW
REVIEW IS FOR GENERAL COMPLIANCE WITH CONTRACT DOCUMENTS. NO RESPONSIBILITY IS ASSUMED FOR CORRECTNESS OF DIMENSIONS OR DETAILS.
APPROVED [X]
APPROVED AS NOTED [ ]
REVISE AND RESUBMIT [ ]
REJECTED [ ]
BY: PLC DATE: 1/14/25

SEALED BY:
SOUTH CAROLINA PROFESSIONAL ENGINEER No. 35290 ROBERT R WIGHTON
Nov 15 2024
STAMP APPLIES TO OH-22 REVISIONS ONLY REFERNCE REV 0 OF THIS DRAWING FOR STRUCTURE OH-12 STAMPED BY DAVID LALLONE LIC#38665 ON OCT 25, 2023

NO:	REVISIONS	DATE	MADE	CHECKED
1	REVISED OH-22 FOR TO ADDED RT UPRIGHT STUB	11/15/24	MAH	RRW

walpar
A valmont COMPANY
POST OFFICE BOX 28650
BIRMINGHAM ALABAMA 35228
4200 JEFFERSON AVENUE
BIRMINGHAM ALABAMA 35221
PHONE (205)-925-4990
FAX (205) 925-7273

STATE:	South Carolina
FED PROJ:	Carolina Crossroads Phase 1 & 2
ST PROJ:	P039718
COUNTY:	Lexington & Richland
ROUTE:	I-26 & I-126
SUBJECT:	OVERHEAD SIGN SUPPORT DESIGN
	WALPAR STD BOX TRUSS DESIGN
FOR:	Archer-United Joint Venture
DRAWN BY:	IWL DATE: 8/24/23
CHECKED BY:	RRW DATE: 9/14/23
DWG NO:	C3546-D15

BTDPD-D

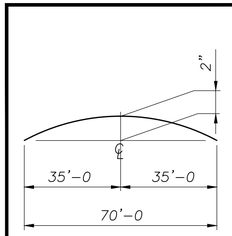

CAMBER DIAGRAM

(PERMANENT CAMBER = 1½")

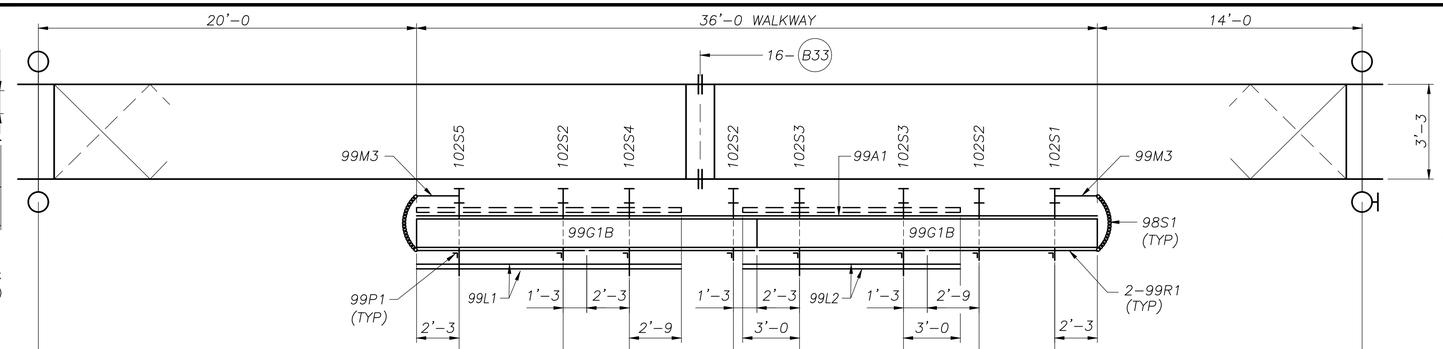

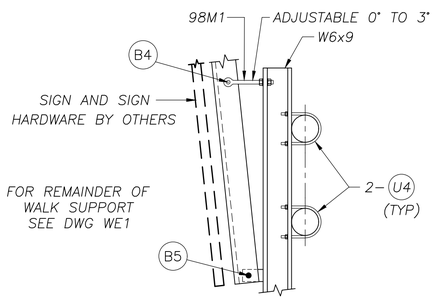

TYP SECTION THRU SIGN SUPPORT & SIGN HANGER

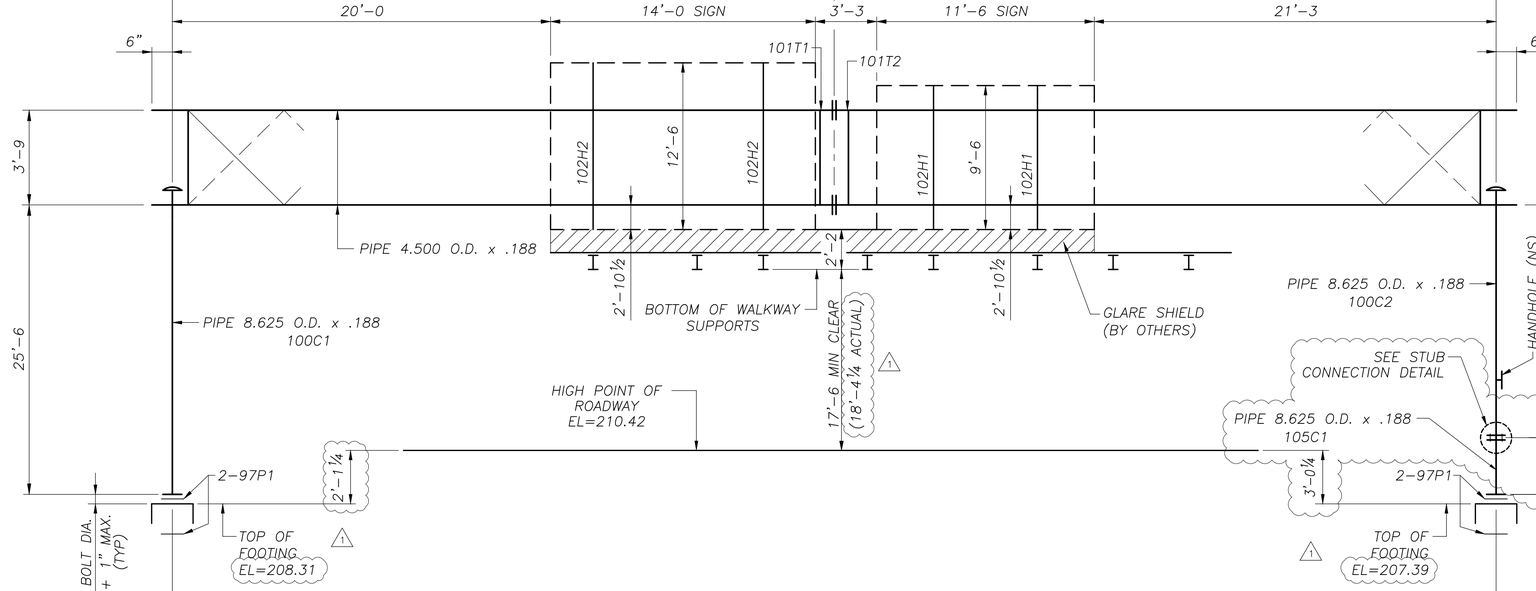

ELEVATION

STR NO: OH-22

STA NO: 3027+15.32(WB)

(LOOKING IN DIRECTION OF TRAFFIC FLOW)

NOTE: STRUCTURE SHALL NOT BE ERECTED WITHOUT SIGNS, SIGN HGR'S OR A SUITABLE VIBRATION DAMPER

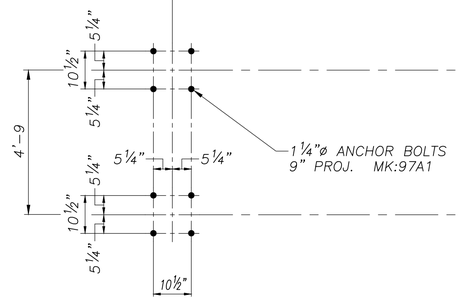

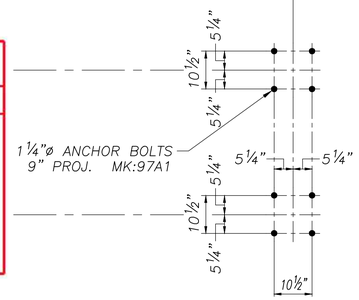

ANCHOR BOLT PLAN

TYPICAL UPRIGHT

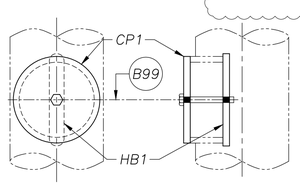

HANDHOLE DETAIL

PRE ASSEMBLE CP1 TO HB1 WITH B99 BOLT. DISTURB THREADS SO HB1 CAN NOT BE REMOVED. INSTALL COVER ASSEMBLY INTO HANDHOLE OPENING AND TIGHTEN BOLT TO SECURE.

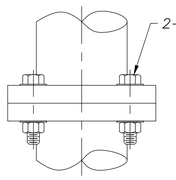

STUB CONNECTION DETAIL

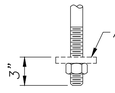

ANCHOR DETAIL

(TYPICAL)

SHIPPING LIST		C3546-E15
QTY	MARK	DESCRIPTION
16	97A1	ANCHOR BOLTS
8	97P1	ANCHOR TEMPLATES
1	101T1	BOX TRUSS 4.1' x 4.6' x 35.6'
1	101T2	BOX TRUSS 4.1' x 4.6' x 35.6'
1	100C1	UPRIGHT 6' x 1.3' x 25.7'
1	100C2	UPRIGHT 6' x 1.3' x 24'
1	102S1	WALK SUPPORT
3	102S2	WALK SUPPORTS
2	99M3	SAFETY CHAIN SUPPORT
2	98S1	SAFETY CHAIN
8	98P1	HINGE PIN ASSEMBLIES
16	99M1	CLAMP PLATES
2	99M2	SPLICE PLATES
8	99P1	HANDRAIL POSTS
8	99R1	HANDRAILS
1	99A1	SAFETY ANGLES
2	99G1B	GRATING
2	102S3	SIGN/WALK/LIGHT SUPPORTS
1	102S4	SIGN/WALK/LIGHT SUPPORT
1	102S5	SIGN/WALK/LIGHT SUPPORT
2	102H1	SIGN HANGERS (ANGLE ARM)
2	102H2	SIGN HANGERS (ANGLE ARM)
4	98M1	EYEBOLT ASSEMBLIES
2	99L1	LIGHT SUPPORTS
2	99L2	LIGHT SUPPORTS
1	CP1	COVER PLATE ASSEMBLY
1	HB1	HANDHOLE BAR
36	B1	3/8" x 1 1/4" BOLT w/HN/LW (A307 GALV)
16	B3	1 3/8" OD x 14 GA WASHER (A307 GALV)
4	B4	3/4" x 2 1/2" HHB w/HN/FW/LW (A325 GALV)
4	B5	3/4" x 2" HHB w/HN/LW (A325 GALV)
8	B6	1/2" x 1 1/2" HHB w/HN/LW (A325 GALV)
16	B33	3/4" x 3" HHB w/HN/FW/DTI (A325 GALV)
1	B99	1/4" x 4" HHB (A307 GALV)
4	C8	POLE CAPS #388 w/ (2) 1/2" SET SCRS(S.S.)
4	S4	SADDLE SHIMS #350
16	U1	5/16" U-Bolts w/(2 ea) HN/LW (ZINC PL)
40	U4	1/2" U-Bolts w/(2 ea) HN/LW/FW (GALV)
1	105C1	UPRIGHT STUB 6.1' x 1.3' x 2.6'
8	B35	1 1/4" x 4 3/4" HHB w/HN/(2)FW/DTI (A325 GALV)

PREVIOUSLY SHIPPED

NOTE:

SEE GENERAL NOTES DRAWING FOR MATERIAL SPECIFICATIONS, FOUNDATION AND STANDARD NOTES

DESIGN DWGS: D15, D18, D20 DESIGN NO: BT9 AASHTO 6th Edition Spec's

OH-22

INFRASTRUCTURE CONSULTING & ENGINEERING

SHOP DRAWING REVIEW

REVIEW IS FOR GENERAL COMPLIANCE WITH CONTRACT DOCUMENTS. NO RESPONSIBILITY IS ASSUMED FOR CORRECTNESS OF DIMENSIONS OR DETAILS.

APPROVED	X
APPROVED AS NOTED	
REVISE AND RESUBMIT	
REJECTED	

BY: PLC DATE: 1/14/25

SEALED BY:

SOUTH CAROLINA PROFESSIONAL ENGINEER LICENSE No. 35290 ROBERT R WIGINTON

Nov 15 2024

STAMP APPLIES TO OH-22 REVISIONS ONLY REFERENCE REV 0 OF THIS DRAWING FOR STRUCTURE OH-12 STAMPED BY DAVID LALLONE LIC# 38665 ON OCT 25, 2023

walpar A valmont COMPANY

POST OFFICE BOX 28650
BIRMINGHAM ALABAMA 35228
4200 JEFFERSON AVENUE
BIRMINGHAM ALABAMA 35221
PHONE (205)-925-4990
FAX (205) 925-7273

STATE:	South Carolina
FED PROJ:	Carolina Crossroads Phase 1 & 2
ST PROJ:	P039718
COUNTY:	Lexington & Richland
ROUTE:	I-26 & I-126
SUBJECT:	OVERHEAD BOX TRUSS STRUCTURE ERECTION DRAWING
FOR:	Archer-United Joint Venture
DRAWN BY:	DLK DATE: 10/4/23
CHECKED BY:	DLJ DATE: 10/16/23
DWG NO:	C3546-E15

NO:	REVISIONS	DATE	MADE	CHECKED
1	ADDED RIGHT UPRIGHT STUB DUE TO FIELD ISSUES	11/15/24	DLK	DLJ

C3546–105

PARTS PER CONT	PART MARK NO	NO OF PIECES REQ'D	SECTION SYM	DESCRIPTION OF MATERIAL	LENGTH FEET	LENGTH INCHES	PARTS FOR ONE UNIT	
	105C1	1		UPRIGHT STUB				
	a	2	PIPE	8.625 x .188	2	6		
	b	2	PIPE	2.375 x .154	4	0 5/8		
	d	2	PL	1 1/4 x 15 1/2	1	3 1/2		
	f	2	PL	1 1/4 x 15 1/2	1	3 1/2		

SHIPPING LIST		
QTY	MARK	DESCRIPTION
1	105C1	UPRIGHT STUB
8	B35	1 1/4" x 4 3/4" HHB w/HN/(2)FW/DTI (A325 GALV)

VENT HOLE SIZES	
WEB MEMBER (O.D.)	HOLE DIA. ± 1/4"
< 3.500	3/4
3.500	1 3/4
4.000	2
4.500	2 1/4
5.563	2 3/4
6.625	3 1/4

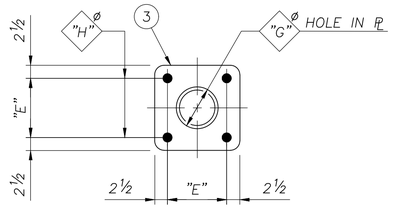

SPLICE PLATE @ 105C1

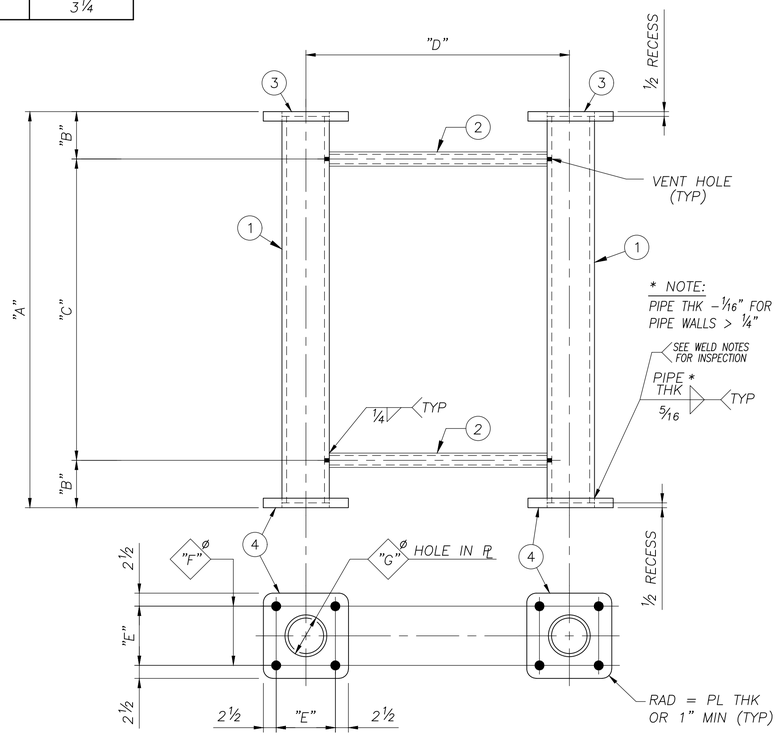

UPRIGHT STUB

MARK	QTY	"A"	"B"	"C"	"D"	"E"	"F"	"G"	"H"	1	2	3	4
105C1	1	2'–7	6	1'–7	4'–9	10½	1½	8 1/16	1 3/8	a	b	d	f

NOTE: SHOP SHIP FROM THIS DRAWING

NOTE:
SEE GENERAL NOTES DRAWING FOR MATERIAL SPECIFICATIONS AND STANDARD NOTES

REF DWG: E15

AASHTO 6th Edition Spec's

INFRASTRUCTURE CONSULTING & ENGINEERING

SHOP DRAWING REVIEW

REVIEW IS FOR GENERAL COMPLIANCE WITH CONTRACT DOCUMENTS. NO RESPONSIBILITY IS ASSUMED FOR CORRECTNESS OF DIMENSIONS OR DETAILS.

APPROVED [X]
APPROVED AS NOTED [ ]
REVISE AND RESUBMIT [ ]
REJECTED [ ]

BY: PLC DATE: 1/14/25

SEALED BY:

SOUTH CAROLINA PROFESSIONAL ENGINEER Robert R Wigington No. 35290 ROBERT R WIGINGTON

Nov 15 2024

walpar
A valmont COMPANY

POST OFFICE BOX 28650
BIRMINGHAM ALABAMA 35228
4200 JEFFERSON AVENUE
BIRMINGHAM ALABAMA 35221
PHONE (205)–925–4990
FAX (205) 925–7273

STATE:	South Carolina
FED PROJ:	Carolina Crossroads Phase 1 & 2
ST PROJ:	P039718
COUNTY:	Lexington & Richland
ROUTE:	I–26 & I–126

SUBJECT: OVERHEAD SIGN SUPPORT
DETAIL OF UPRIGHT STUB

FOR: Archer–United Joint Venture

DRAWN BY: DLK DATE: 10/18/24
CHECKED BY: DLJ DATE: 11/15/24

DWG NO: C3546–105

NO:	REVISIONS	DATE	MADE	CHECKED
0	CHECK COMPLETE	11/15/24	DLK	DLJ

SH–DET1

NAME: E:\acad\JobsNPrg\3546\3546–105.dwg DATE: NOV 15, 2024 TIME: 3:39 PM dj706290

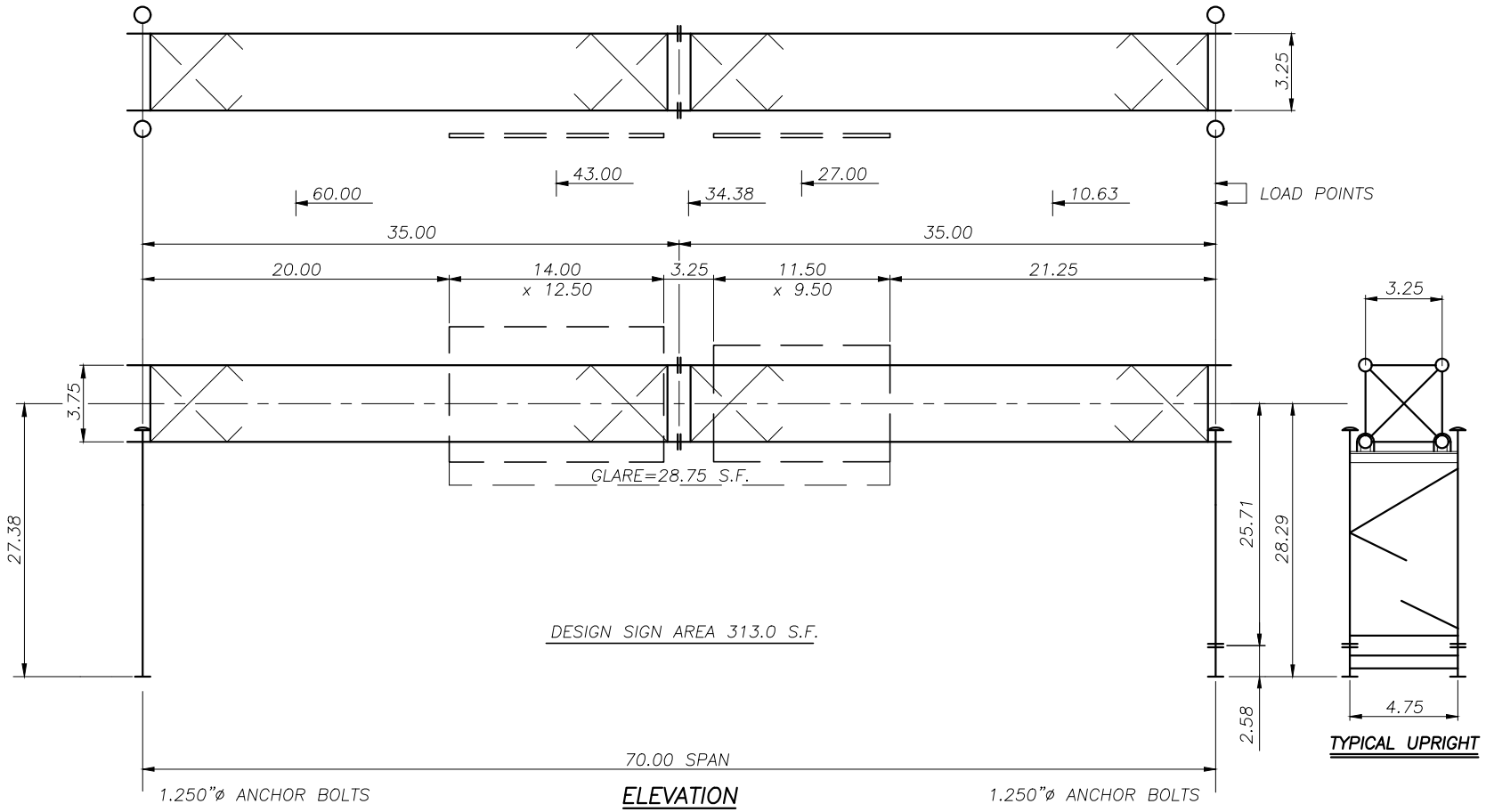

ELEVATION

STR NO: OH-22
STA NO: 3027+15.32(WB)

TRUSS:	CHORDS	4.500 x 0.188
	VERT DIAGONALS	1.660 x 0.140
	HORIZ DIAGONALS	1.660 x 0.140
	STRUTS	1.315 x 0.133
	INT DIAGONALS	1.315 x 0.133

UPRIGHTS:	LEFT POSTS	8.625 x 0.188
	STRUTS & DIAGONALS	2.375 x 0.154
	RIGHT POSTS	8.625 x 0.188
	STRUTS & DIAGONALS	2.375 x 0.154

SOUTH CAROLINA
LICENSED PROFESSIONAL ENGINEER
No. 35290
ROBERT R WIGINTON

Robert R Wiginton

Nov 15 2024

INFRASTRUCTURE CONSULTING & ENGINEERING

SHOP DRAWING REVIEW

REVIEW IS FOR GENERAL COMPLIANCE WITH CONTRACT DOCUMENTS. NO RESPONSIBILITY IS ASSUMED FOR CORRECTNESS OF DIMENSIONS OR DETAILS.

- APPROVED ☒
- APPROVED AS NOTED ☐
- REVISE AND RESUBMIT ☐
- REJECTED ☐

BY: PLC DATE: 1/14/25

WP walpar
A Vermont COMPANY

1

Subject: Box Truss Design Information
Job No: C3546
By: RRW
Date: 11/14/24
Sheet: BT9
GROUP 2
Chk'd By: ---
Date: ---

Box Truss Double Pole Structure Design

Reference Walpar Job Number C3546
Reference Design Information Sheet Number BT9 Structure : OH-22 Station : 3027+15.32(WB)
State SC
AASHTO Specification 6th Edition Fatigue Category : II
Design Wind Velocity (V) 100 mph

Structure Dimensions

Span (S)	70.00 ft	Truss Hgt (U)	3.75 ft	Truss Depth (Y)	3.25 ft
Truss Section Length	35.50 ft			Coeff of Hgt (Kz)	1.00
Left Upright Hgt (H)	27.38 ft	Right Upright Hgt (H)	28.29 ft	Center to center of upright posts (Yu)	4.75 ft
		Right Upright Splice Dist:	2.5833 ft		

Sign Information **Design Sign Area: 313.00 sq ft**

Sign	Load (i)	Lgth (B_i)	Hgt (D_i)	Location (a_i)	Unit Wgt	Depth	C_d	Front/Back	Z Ecc	Area	Exit Panel
1	2	11.50	10.50	27.00	7.00		1.12	F	5.75	124.0	X
2	4	14.00	13.50	43.00	7.00		1.12	F	5.75	189.0	

Walkway Information

	Lgth	Location	Width	Unit wgt	Y Ecc
WW1	36.00	32.00	2.54	55	5.60

Load Summary Estimate for Field Use Only
(Distance from right end of assembled truss)

Weight of truss only	3525 lbs
Weight of erected signs & WW	3581 lbs
Center of erected sign & WW+truss load	35.05 ft
Front to Back Overturning on Truss	14698 ft-lbs
Max upright weight	2157 lbs
Max truss section weight	1770 lbs

SOUTH CAROLINA PROFESSIONAL ENGINEER
Robert R Wiginton
No. 35290
LICENSE
ROBERT R WIGINTON

Nov 15 2024

1

Walpar © 2014

Box Truss Double Pole Structure Design

Job No : C3546 Structure No : OH-22 Station : 3027+15.32(WB)

Loads

Unit wind load on sign(s)/C_d: 29.18 psf Unit wind load on exposed truss: 35.02 psf Unit wgt of truss: 48.95 plf Unit ice wgt on truss: 22.43 plf

Truss Area for Wind Load (A_t): 1.18 sq ft / ft ***All loads in charts in lbs, ft or ft-lbs unless noted**

Truss Load Summary For Actual Sign & WW Condition

	Load (i)	Dead	Wind (W_p & W_h)	Ice
Sign and Truss Loads Ref: (BT9)	1	1040	876	477
	2	1431	4053	630
	3	159	134	73
	4	2008	6192	881
	5	979	824	449
WW Loads	WW1	1980	769	961
Left Reaction (R_L)		3766	6623	1716
Right Reaction (R_R)		3831	6224	1754
Maximum Moments (M)		85094	160500	38800
Point of "0" shear (A_m)		35.92	37.49	35.74

** WW/EQ Loads are incorporated into Sign and Truss Loads to determine Reactions and Moments

Serviceability Requirements

Truss DL + IL Deflection	0.74 in
Limit for Deflection	5.60 in
Camber Used (Cu)	2.00 in
Permanent Camber (Cp)	1.49 in

SOUTH CAROLINA PROFESSIONAL ENGINEER
No. 35290
ROBERT R WIGINTON

Nov 15 2024

Post Loads

	Dead	Wind	Ice	Group II t_c	Group III t_c	Lateral Stiffness Ratio
Left Upright	1499	714	459	167	250	0.53
Right Upright	2157	681	488	179	269	0.47

1

Walpar © 2014

Box Truss Double Pole Structure Design

Job No : C3546 Structure No : OH-22 Station : 3027+15.32(WB)

Load Combinations for Design Sign Area

Truss Member Loads	DL	DL +WL	DL+1/2 WL+IL
Truss Chords (Pc)	14887	39579	34091
Vertical Diagonals (Pv)	4544	4887	6617
Horizontal Diagonals (Ph)	1717	6949	5024
Vertical Struts (Psv)	3213	2158	3003
Horizontal Struts (Psh)	1124	4551	3290
Truss Moments			
Truss Chords (XMc)	980	4250	2660

Upright Member Loads	Upright Loads					Web Member Loads	
Left Upright	M_N	M_{tc}	V_N	V_{tc}	Axial	Diagonals	Struts
Group II Comb. 1 (DL+WL)	191451	37536	7338	1452	5264	11140	7877
Group III Comb. 1 (DL+1/2WL+IL)	95725	18768	3669	726	7440	5570	3939
Group II Comb. 2 (DL+WL)	114871	56304	4403	2177	5264	7194	5087
Group III Comb. 2 (DL+1/2WL+IL)	57435	28152	2201	1089	7440	3597	2543
Right Upright							
Group II Comb. 1 (DL+WL)	196027	38970	6905	1464	5988	10136	7167
Group III Comb. 1 (DL+1/2WL+IL)	98013	19485	3452	732	8230	5068	3584
Group II Comb. 2 (DL+WL)	117616	58455	4143	2196	5988	6643	4697
Group III Comb. 2 (DL+1/2WL+IL)	58808	29228	2071	1098	8230	3321	2349

Material Information

	Pipe Size (Min Yield)	Unbraced Length	CSR Group II	CSR Group III
Truss Chords	4.500 x 0.188 (52 ksi)	7.50 ft	0.92	0.69
Vertical Diagonals	1.660 x 0.140 (52 ksi)	5.30 ft	0.51	0.70
Vertical Struts	1.315 x 0.133 (52 ksi)	3.75 ft	0.25	0.35
Horizontal Diagonals	1.660 x 0.140 (52 ksi)	4.96 ft	0.64	0.46
Horizontal Struts	1.315 x 0.133 (52 ksi)	3.25 ft	0.42	0.30

	Pipe Size (Min Yield)	Unbraced Length	CSR (Comb. 1) Group II	CSR (Comb. 1) Group III	CSR (Comb. 2) Group II	CSR (Comb. 2) Group III
Left Upright Posts	8.625 x 0.188 (52 ksi)	25.31 ft	0.74	0.38	0.89	0.46
Left Upright Diagonals	2.375 x 0.154 (52 ksi)	5.70 ft	0.44	0.22	0.28	0.14
Left Upright Strut	2.375 x 0.154 (52 ksi)	4.03 ft	0.24	0.12	0.15	0.08
Right Upright Posts	*8.625 x 0.188 (52 ksi)	26.23 ft	0.75	0.39	0.92	0.48
Right Upright Diagonals	2.375 x 0.154 (52 ksi)	5.62 ft	0.39	0.20	0.26	0.13
Right Upright Strut	2.375 x 0.154 (52 ksi)	4.03 ft	0.22	0.11	0.14	0.07

* Post size is for stub only, original post size may vary



Nov 15 2024

1

BT9 - 3 of 13

Walpar © 2014

Box Truss Double Pole Structure Design

Job No : C3546 Structure No : OH-22 Station : 3027+15.32(WB)

Structure Detail Information

Truss Chord Splices

Maximum Design Load at Splice	65503 lbs
Splice Moment (per inch of circum)	2896 in-lbs
Splice Bolt Circle	7.5 in.
Splice Bolt Qty & Size	4 - ¾" ø A325
Splice Plate Thickness	0.75 in.
Splice Plate Weld	¼ fillet

Upright Detail

	Left	Right
Maximuim Anchor Bolt Pullout	23268 lbs	23774 lbs.
Anchor Bolt Spacing	10.5 in.	10.5 in.
Anchor Bolt Yield	55 ksi	55 ksi
Anchor Bolt Qty & Size (ea pole)	4 - 1.25" ø	4 - 1.25" ø
Anchor Bolt Length (Embed)	4.50 ft (3.5 ft)	4.50 ft (3.5 ft)
Anchor Bolt CSR	0.43	0.45
Base Plate Thickness	1.25 in.	1.25 in.
Base Plate Weld	5/16 fillet	5/16 fillet
Truss Seat	WT6x13	WT6x13
Truss Connection U-Bolts	½" ø	½" ø
Splice Moment (per inch of circum)		4917 in. lbs
Splice Bolt Circle		10.5 in.
Splice Bolt Qty & Size		4 - 1¼" ø A325
Splice Plate Thickness		1.25 in.
Splice Plate Weld		5/16 fillet

Sign Hanger Detail

Design hanger spacing 9.00 ft

Sign Hanger U-Bolt type ASTM-A307

SIGN	Max UBL at End	Max Spacing	Hanger U-Bolt	Sign Hanger	Hanger Support
1	3.40 ft	9.00 ft	2 - ½" ø	L5x3x5/16	W6x9
2	4.40 ft	9.00 ft	2 - ½" ø	L5x3x5/16	W6x9

Structure Input (For Foundation Designs)

	Left	Right
Truss DL React (Rd)	4.95 k	5.13 k
Upr DL React (Rv)	1.50 k	2.16 k
Truss WL React (Rh)	6.68 k	6.21 k
Upr WL React (Wv)	0.71 k	0.68 k
Distance To Rh (H1)	27.38 ft	28.29 ft
Distance To Wv (H2)	14.63 ft	15.08 ft
Min Ped Lgth (PL)	6.75 ft	6.75 ft
Min Ped Wth (PW)	2.00 ft	2.00 ft



Nov 15 2024

1

BT9 - 4 of 13

Walpar © 2014

Box Truss Double Pole Structure Design

Job No : C3546 Structure No : OH-22 Station : 3027+15.32(WB)

Vibration and Fatigue (Per AASHTO 6th Edition)

Natural Wind Gust Load on Sign(s)/C_d	4.42 psf	Truck Induced Gust Load on Truss	15.29 psf
Natural Wind Gust Load on Truss	5.30 psf	Extent of Truck Induced Gust	12.00 ft
		Truss Area for Truck Induced Gust	1.15 sq ft / ft
		Location of Center of Truck Induced Gust	35.00 ft

Truck Induced Gust Loading

ID	P_{TG} (Uplift)	P_{TG} Torque	Location
Truss Chords	210		35.00
SIGN 1 (PARTIAL)			30.88
Walkway	1265	1889	35.00
Left Reaction	738		
Right Reaction	738		
Maximum Moments	23610		

Truss Load Summary for Natural Wind

LOADS (i)	$P_{NWG(i)}$
1	133
2	614
3	20
4	938
5	125
Left Reaction	1003 lbs
Right Reaction	943 lbs
Maximum Moments	24308 ft-lbs

Load Combinations for Vibration and Fatigue

Truss Members	P_{NWG}	P_{TG}
Truss Chords	3740	3148
Vertical Diagonals		522
Horizontal Diagonals	383	
Vertical Struts		369
Horizontal Struts	251	
Upright Members		
Left Post	5781	369
Right Post	5615	369

Vibration and Fatigue Stresses

	NWG (ksi)	TIG (ksi)	Allowable (ksi)	
Truss Vertical Diagonals		0.78	1.20	
Truss Horizontal Diagonals	0.57		1.20	
Truss Vertical Struts		0.75	1.20	
Truss Horizontal Struts	0.51		1.20	
Truss chord at web members	0.39	1.24	4.50	
Upright Base Connection LT	1.16	0.07	4.50	Socket Connection Base Detail
Upright Base Connection RT	1.13	0.07	4.50	Socket Connection Base Detail
Anchor bolts - LT	1.49		7.00	
Anchor bolts - RT	1.45		7.00	



Nov 15 2024

1

BT9 - 5 of 13

Walpar © 2014

Box Truss Double Pole Structure Design

Job No : C3546 Structure No : OH-22 Station : 3027+15.32(WB)

Left Foundation Design

Boring Type SPT Boring Designation G-070
Major Soil Type Cohesionless Depth to Water NA Surcharge (Frost) Depth 2 ft
Ground Slope 2:1 Consider slope stability? Y

SOIL TYPES	
01-GP	07-SM
02-GW	08-ML
03-GM	09-MH
04-GC	10-SC
05-SP	11-CL
06-SW	12-CH

Soil Properties

Depth	N Value	γ' (pcf)	Φ (deg)	S_u (lbf/ft^2)	α	β	f_{SN} (lbf/ft^2)	$(N_1)_{60}$	Soil Type
**0 - 2	14	107	34			1.20		28	07
2 - 6	35	140	32	2000	0.55		1490	70	11
6 - 8	40	129	40	2000	0.55		1100	80	10
8 - 10	24	112	35			1.10	1375	35	07
10 - 12	19	110	34			1.05	1788	25	07
12 - 13	40	120	36			1.02		47	07
13 - 35	40	120	35			0.99		34	07

* Soil Type 13 indicates rock layer with N>60 for cohesionless soil or N>40 for cohesive soils
**Top 2.0 ft of soil will not contribute to load resistance.

Soil Bearing Capacity for Left Spread Footing Design

Footing width, B 8.00 ft
Footing length, L 15.00 ft
Eccentricity, e_L 2.21 ft
Eccentricity, e_B 0.46 ft
Effective ftg width, B' 7.07 ft
Effective ftg width, L' 10.58 ft

Total wgt of load, foundation and soil, Pt 87.51 k
Normal moment, ML 193.34 ft-k
Transverse moment, Mw 40.49 ft-k
Distance from ground to bottom of footing, d_{min} 3.25 ft
Distance from ground to bottom of footing, D_f 5.25 ft
Distance to ground water from bottom of ftg, z_w N.A.
Overburden pressure at base of footing, q 0.63 ksf
Weighted average soil unit weight below pad, γ 120 pcf

Ultimate bearing capacity, q_{ult} 60.00 ksf
Allowable Bearing Capacity 20.75 ksf
Bearing Capacity used *** 2.00 ksf

***Note: Bearing capacities greater than 4.0 ksf will rarely effect spread footing pad size



Nov 15 2024

1

BT9 - 6 of 13

Walpar © 2014

Box Truss Double Pole Structure Design

Job No : C3546 Structure No : OH-22 Station : 3027+15.32(WB)

Right Foundation Design

Boring Type	SPT	Boring Designation	G-099		
Major Soil Type	Cohesive	Depth to Water	7.5 ft	Surcharge (Frost) Depth	2 ft
Ground Slope	2:1	Consider slope stability?	Y		

SOIL TYPES	
01-GP	07-SM
02-GW	08-ML
03-GM	09-MH
04-GC	10-SC
05-SP	11-CL
06-SW	12-CH

Soil Properties

Depth	N Value	γ' (pcf)	Φ (deg)	S_u (lbf/ft^2)	α	β	f_{SN} (lbf/ft^2)	$(N_1)_{60}$	Soil Type
**0 - 2.5	11	116	28	1375			257	22	11
2.5 - 6.1	10	105	33	2000	0.55	0.81	1701	20	07
6.1 - 7.5	20	125		2000	0.55		2139	40	12
7.5 - 8	20	65		2500	0.55		1254	40	12
8 - 12	26	71		3250	0.55		1439	42	12
12 - 35	40	85		4000			1572	25	12
							2056		

* Soil Type 13 indicates rock layer with N>60 for cohesionless soil or N>40 for cohesive soils

**Top 2.0 ft of soil will not contribute to load resistance.

Soil Bearing Capacity for Right Spread Footing Design

Footing width, B	7.00 ft	Total wgt of load, foundation and soil, Pt	78.78 k
Footing length, L	15.00 ft	Normal moment, ML	185.87 ft-k
Eccentricity, e_L	2.36 ft	Transverse moment, Mw	38.97 ft-k
Eccentricity, e_B	0.49 ft	Distance from ground to bottom of footing, d_{min}	3.50 ft
Effective ftg width, B'	6.01 ft	Distance from ground to bottom of footing, D_f	5.25 ft
Effective ftg width, L'	10.28 ft	Distance to ground water from bottom of ftg, z_w	2.25 ft
		Overburden pressure at base of footing, q	0.40 ksf
		Weighted average soil unit weight below pad, γ	86 pcf

Ultimate bearing capacity, q_{ult}	22.82 ksf
Allowable Bearing Capacity	7.50 ksf
Bearing Capacity used ***	2.25 ksf

***Note: Bearing capacities greater than 4.0 ksf will rarely effect spread footing pad size



Nov 15 2024

1

BT9 - 7 of 13

Walpar © 2014

Box Truss Double Pole Structure Design

Job No : C3546 Structure No : OH-22 Station : 3027+15.32(WB)

Left Upright Spread Footing Design

Material/Soil Specifications and Safety Factors

Concrete f'_c :	3000 psi	Concrete wgt :	150 pcf
Rebar yield f_y :	60000 psi	Rebar F_s :	24000 psi
Soil Bearing Capacity :	2000 psf	Soil unit wgt :	110 pcf

Load Safety Factor[1] : 1.15

Loads and Locations From Structure

Truss DL React (Rd)	4.95 k	Base to Truss Load Dim (H1)	27.38 ft
Upright DL React (Rv)	1.50 k	Base to Upright Load Dim (H2)	14.63 ft
Truss WL React (Rh)	6.68 k	Total DL React (DL)	6.45 k
Upright WL React (Wv)	0.71 k	Transverse Wind Component (tc)	1.48 k

Loads at Top of Pedestal from Structure

Axial load (P)	6.45 k		
Moment (ML)	193.34 ft-k	Moment (Mw)	40.49 ft-k
Shear (VL)	7.40 k	Shear (Vw)	1.48 k

Final Spread Footing Design Sizes

Pad Length (L)	15.00 ft	Pedestal Width (PW)	2.00 ft
Pad Width (W)	8.00 ft	Pedestal Length (PL)	6.75 ft
Pad Thickness (T)	1.50 ft	Pedestal Projection at Ctr (PE)	1.25 ft
		Ground line to top of pad (PT)	3.75 ft

Reinforcement

Pad	Pedestal
Top each way - #4 Bars @ 12" o.c.	4 ea. - #8 Vert. Bars @ 5.33" o.c. @ Ends
X Direction - 8 - #5 Bars @ 12.00" o.c.	10 ea. - #8 Vert. Bars @ 6.64" o.c. @ Sides
Y Direction - 15 - #4 Bars @ 12" o.c.	6 - #4 Ties @ 12" max. o.c.

Serviceability

6.91% of footing in uplift

Safety factor against overturning = 30.46

Quantities

951 lbs of reinforcement

9.17 cyd of concrete

Uncracked Section Calculations

Wgt of soil above pad (Ps)	43.93 k		
Wgt of concrete (Pc)	37.13 k	Total Area (A)	120.00 ft²
Total Load (Pt)	87.51 k		
X	7.50 ft	Y	4.00 ft
Ix	640.00 ft⁴	Iy	2250.00 ft⁴
Mx	57.62 k-ft	My	277.62 k-ft

Corner Stresses [Factored[1] (unfactored) loads]

F1	2.01 ksf (1.85 ksf)
F2	1.29 ksf (1.22 ksf)
F3	-0.56 ksf (-0.39 ksf)
F4	0.16 ksf (0.24 ksf)

Cracked Section Calculations [Factored loads[1] (unfactored loads)]

A1	81.27 ft² (90.97 ft²)	L1	10.16 ft (11.37 ft)	W1	8.00 ft (8.00 ft)
A2	12.05 ft² (12.45 ft²)	L2	4.84 ft (3.63 ft)	W2	2.49 ft (3.43 ft)
A3	13.34 ft² (8.29 ft²)	L3	4.84 ft (3.63 ft)	W3	5.51 ft (4.57 ft)
A'	106.66 ft² (111.71 ft²)				
Xc	0.74 ft (0.47 ft)	X1	2.42 ft (1.81 ft)	Y1	0.00 ft (0.00 ft)
Yc	0.27 ft (0.18 ft)	X2	-5.08 ft (-5.69 ft)	Y2	2.76 ft (2.28 ft)
		X3	-4.27 ft (-5.08 ft)	Y3	-0.33 ft (-0.95 ft)
Ixc	497.30 ft⁴ (555.21 ft⁴)	X'	8.24 ft (7.97 ft)		
Iyc	1762.67 ft⁴ (1912.26 ft⁴)	Y'	4.27 ft (4.18 ft)		
Ixcyc	-181.18 ft⁴ (-134.91 ft⁴)				
Mxc	33.95 ft-k (34.02 ft-k)				
Myc	213.20 ft-k (200.57 ft-k)				

Corner Stresses [Factored[1] (unfactored) loads]

F1	2.28 ksf (1.97 ksf)
F2	1.35 ksf (1.26 ksf)
F3	-0.64 ksf (-0.40 ksf)
F4	0.29 ksf (0.30 ksf)



Nov 15 2024

1

BT9 - 8 of 13

Walpar © 2014

Box Truss Double Pole Structure Design

Job No : C3546 Structure No : OH-22 Station : 3027+15.32(WB)

Left Upright Spread Footing Design (cont.)

Moment and Shear Calculation Results

LL	4.13 ft	WW	3.00 ft	S_{y0}	1.82 ksf	S_{x0}	1.29 ksf
L_{x1}	6.38 ft	W_{x1}	0.00 ft	S_{y1}	1.67 ksf	S_{x1}	1.29 ksf
L_{x2}	4.54 ft	W_{x2}	1.83 ft	S_{y2}	1.42 ksf	S_{x2}	1.07 ksf
L_{y1}	1.13 ft	W_{y1}	4.00 ft	S_{y3}	1.27 ksf	S_{x3}	0.94 ksf
L_{y2}	1.83 ft	W_{y2}	2.17 ft	Pcs	0.64 ksf		
				DTS_y	4.67 k/ft	DTS_x	1.20 k/ft
				M_{YY}	8.48 ft-k	M_{XX}	2.40 ft-k

Reinforcement Calculations

f_{cr} : 1596 psi v_{cr} : 69 psi n : 9.29

b : 12.00 in d : 14.00 in x : 5.25 in

About Y Axis		About X Axis	
p :	0.0018	p :	0.0018
k :	0.1669	k :	0.1669
j :	0.9444	j :	0.9444
f_{ca} :	549 psi	f_{ca} :	155 psi
v_{ca} :	29 psi	v_{ca} :	8 psi
Mt :	185911 in-k	Mt :	52560 in-k
ld_r :	19.92 in	ld_r :	21.98 in
ld_a :	46.50 in	ld_a :	33.00 in
ld_{min} :	34.23 in	ld_{min} :	27.39 in
A_{sr} :	0.24 in²	A_{sr} :	0.07 in²
A_s Used :	0.31 in²	A_s Used :	0.20 in²

Tie Size : #4

Pedestal Calculations

V_1 : 7542 lbs V_2 : 0 lbs V_t : 7542 lbs

About Y Axis		About X Axis	
C_x :	40.50 in	C_y :	12.00 in
G_x :	73.00 in	G_y :	16.00 in
f_a :	3.32 psi	f_v :	340.94 psi
F_a :	1596 psi	F_v :	26334 psi
f_{bx} :	16.30 psi	f_{by} :	299.20 psi
F_{bx} :	1596 psi	F_{by} :	1596 psi
M_x :	47884 ft-lb	M_y :	230314 ft-lb
M_{ox} :	235357 ft-lb	M_{oy} :	1073815 ft-lb
I_x :	1427865 in⁴	I_y :	110845 in⁴
A_g :	1944 in²	A_{sm} :	19.44 in²
A_{st} :	22.12 in²	A_s :	5.53 in²
QTY :	28	A_b :	0.79 in²
X Sp'g :	6.64 in	Y Sp'g :	5.33 in
C_{sx} :	22.28 in	C_{sy} :	7.11 in
N qty :	10	R qty :	4
CSR :	0.20	CSM :	0.42



Sliding friction μ : 0.40

Factor of safety against sliding : 3.79

Nov 15 2024

1

BT9 - 9 of 13

Walpar © 2014

Box Truss Double Pole Structure Design

Job No : C3546 Structure No : OH-22 Station : 3027+15.32(WB)

Right Upright Spread Footing Design (Offset Pedestal Design)

Material/Soil Specifications and Safety Factors

Concrete f'_c :	3000 psi	Concrete wgt :	150 pcf		
Rebar yield f_y :	60000 psi	Rebar F_s :	24000 psi		
Soil Bearing Capacity :	2250 psf	Soil unit wgt :	110 pcf	Load Safety Factor[1] :	1.15

Loads and Locations From Structure

Truss DL React (Rd)	5.13 k	Base to Truss Load Dim (H1)	28.29 ft
Upright DL React (Rv)	2.16 k	Base to Upright Load Dim (H2)	15.08 ft
Truss WL React (Rh)	6.21 k	Total DL React (DL)	7.29 k
Upright WL React (Wv)	0.68 k	Transverse Wind Component (tc)	1.38 k

Loads at Top of Pedestal from Structure

Axial load (P)	7.29 k		
Moment (ML)	185.87 ft-k	Moment (Mw)	38.97 ft-k
Shear (VL)	6.89 k	Shear (Vw)	1.38 k
		CL Ped. To Left Side of Pad	3.50 ft

Final Spread Footing Design Sizes

Pad Length (L)	15.00 ft	Pedestal Width (PW)	2.00 ft
Pad Width (W)	7.00 ft	Pedestal Length (PL)	6.75 ft
Pad Thickness (T)	1.50 ft	Pedestal Projection at Ctr (PE)	1.25 ft
		Ground line to top of pad (PT)	3.75 ft

Reinforcement

Pad	Pedestal
Top each way - #4 Bars @ 12" o.c.	4 ea. - #8 Vert. Bars @ 5.33" o.c. @ Ends
X Direction - 7 - #5 Bars @ 12.00" o.c.	10 ea. - #8 Vert. Bars @ 6.64" o.c. @ Sides
Y Direction - 15 - #4 Bars @ 12" o.c.	6 - #4 Ties @ 12" max. o.c.

Serviceability	Quantities
11.66% of footing in uplift	906 lbs of reinforcement
Safety factor against overturning = 12.63	8.33 cyd of concrete

Uncracked Section Calculations

Wgt of soil above pad (Ps)	33.75 k		
Wgt of concrete (Pc)	37.74 k	Total Area (A)	105.00 ft²
Total Load (Pt)	78.78 k		
X	7.50 ft	Y	3.50 ft
Ix	428.75 ft⁴	Iy	1968.75 ft⁴
Mx	82.35 k-ft	My	265.24 k-ft

Corner Stresses [Factored[1] (unfactored) loads]

F1	2.21 ksf (2.02 ksf)
F2	1.31 ksf (1.24 ksf)
F3	-0.71 ksf (-0.52 ksf)
F4	0.19 ksf (0.26 ksf)

Cracked Section Calculations [Factored loads[1] (unfactored loads)]

A1	122.12 ft² (115.49 ft²)	L1	11.10 ft (10.50 ft)	W1	11.00 ft (11.00 ft)
A2	15.83 ft² (13.60 ft²)	L2	2.90 ft (2.50 ft)	W2	5.46 ft (5.44 ft)
A3	8.02 ft² (6.95 ft²)	L3	2.90 ft (2.50 ft)	W3	5.54 ft (5.56 ft)
A'	145.98 ft² (136.05 ft²)				
Xc	0.33 ft (0.29 ft)	X1	1.45 ft (1.25 ft)	Y1	0.00 ft (0.00 ft)
Yc	0.20 ft (0.19 ft)	X2	-5.55 ft (-5.25 ft)	Y2	2.78 ft (2.13 ft)
		X3	-5.07 ft (-4.83 ft)	Y3	-1.79 ft (-0.66 ft)
Ixc	1415.96 ft⁴ (1326.09 ft⁴)	X'	7.33 ft (6.79 ft)		
Iyc	2213.55 ft⁴ (1783.47 ft⁴)	Y'	5.70 ft (5.69 ft)		
Ixcyc	-183.07 ft⁴ (-148.35 ft⁴)				
Mxc	60.25 ft-k (52.41 ft-k)				
Myc	228.75 ft-k (200.80 ft-k)				

Corner Stresses [Factored[1] (unfactored) loads]

F1	1.82 ksf (1.81 ksf)
F2	1.20 ksf (1.23 ksf)
F3	-0.31 ksf (-0.29 ksf)
F4	0.31 ksf (0.29 ksf)



Nov 15 2024

1

BT9 - 10 of 13

Walpar © 2014

Box Truss Double Pole Structure Design

Job No : C3546 Structure No : OH-22 Station : 3027+15.32(WB)

Right Upright Spread Footing Design (Offset Pedestal Design) (cont.)

Moment and Shear Calculation Results

LL	3.63 ft	WW	6.50 ft	S_{y0}	1.62 ksf	S_{x0}	1.06 ksf			S_{x4}	0.44 ksf
L_{x1}	7.00 ft	W_{x1}	0.00 ft	S_{y1}	1.62 ksf	S_{x1}	1.06 ksf			S_{x5}	0.44 ksf
L_{x2}	4.54 ft	W_{x2}	1.33 ft	S_{y2}	1.25 ksf	S_{x2}	0.86 ksf			S_{x6}	0.74 ksf
L_{y1}	0.00 ft	W_{y1}	7.50 ft	S_{y3}	1.07 ksf	S_{x3}	0.92 ksf			S_{x7}	0.81 ksf
L_{y2}	2.46 ft	W_{y2}	2.17 ft	Pcs	0.64 ksf		Mt+	Mt-			
		W_{x3}	5.33 ft	DTS_y	2.85 k/ft	DTS_x	1.14 k/ft	1.85 k/ft			
		W_{x4}	0.00 ft	M_{YY}	4.87 ft-k	M_{XX}	1.19 ft-k	0.56 ft-k			
						M_{XX2}	-1.53 ft-k	0.66 ft-k			

Reinforcement Calculations

f_{cr} : 1596 psi v_{cr} : 69 psi n : 9.29

b : 12.00 in d : 14.00 in x : 5.25 in

About Y Axis		About X Axis	
p :	0.0018	p :	0.0018
k :	0.1683	k :	0.1669
j :	0.9439	j :	0.9444
f_{ca} :	644 psi	f_{ca} :	157 psi
v_{ca} :	32 psi	v_{ca} :	8 psi
Mt :	219772 in-k	Mt :	53080 in-k
ld_r :	21.41 in	ld_r :	21.47 in
ld_a :	46.50 in	ld_a :	27.00 in
ld_{min} :	34.23 in	ld_{min} :	27.39 in
A_{sr} :	0.29 in²	A_{sr} :	0.07 in²
A_s Used :	0.31 in²	A_s Used :	0.20 in²

Tie Size : #4

Pedestal Calculations

V_1 : 7024 lbs V_2 : 0 lbs V_t : 7024 lbs

About Y Axis		About X Axis	
C_x :	40.50 in	C_y :	12.00 in
G_x :	73.00 in	G_y :	16.00 in
f_a :	3.75 psi	f_v :	317.54 psi
F_a :	1596 psi	F_v :	26334 psi
f_{bx} :	15.61 psi	f_{by} :	286.20 psi
F_{bx} :	1596 psi	F_{by} :	1596 psi
M_x :	45860 ft-lb	M_y :	220308 ft-lb
M_{ox} :	235357 ft-lb	M_{oy} :	1073815 ft-lb
I_x :	1427865 in⁴	I_y :	110845 in⁴
A_g :	1944 in²	A_{sm} :	19.44 in²
A_{st} :	22.12 in²	A_s :	5.53 in²
QTY :	28	A_b :	0.79 in²
X Sp'g :	6.64 in	Y Sp'g :	5.33 in
C_{sx} :	22.28 in	C_{sy} :	7.11 in
N qty :	10	R qty :	4
CSR :	0.19	CSM :	0.40



Sliding friction μ : 0.40

Factor of safety against sliding : 3.66

Nov 15 2024

1

BT9 - 11 of 13

Walpar © 2014

Box Truss Double Pole Structure Design

Job No : C3546 Structure No : OH-22 Station : 3027+15.32(WB)

Left Upright Cylindrical Footing Design

Concrete f'_c :	3000 psi	Concrete wgt :	150 pcf
Rebar yield f_y :	60000 psi	Min factor of safety for uplift :	1.00
Reinforcement Clear. :	3 in	Min factor of safety for lateral load :	2.86

Loads and Locations From Structure

Truss DL React (Rd)	4.95 k	Base to Truss Load Dim (H1)	27.38 ft
Upright DL React (Rv)	1.50 k	Base to Upright Load Dim (H2)	14.63 ft
Truss WL React (Rh)	6.68 k	Footing Projection at Ctr (H3)	1.25 ft
Upright WL React (Wv)	0.71 k	C/C of Cylinders (C)	4.75 ft

Normal Overturning Moment (M_{WL})	202.58 ft-k	Effective Hgt (H_{eff})	27.39 ft
Transverse Moment (M_{TL})	40.52 ft-k	Lateral Load (P_{eff})	3.61 k
Resultant Moment (M_R)	206.59 ft-k	Axial Force	4.84 k
Effective Overturning Moment	131.81 ft-k		

Final Cylindrical Footing Design Sizes

Req'd area of steel (A_s)	6.78 in²	Rebar Cage Dia (D1)	22.00 in
1% Cyl Area Min (A_m)	7.07 in²	Vertical bar spacing	7.68 in
Actual Reinf Area (A_p)	7.11 in²		

USE 30 in DIA x 17'- 0 CYLINDER
w/ 9- # 8 VERT. BARS & 18 - #4 HOOPS

Serviceability	Quantities
Calculated lateral safety factor = 21.1	962 lbs of reinforcement
Calculated uplift safety factor = 5.2	6.18 cyd of concrete

Side Shear Results
(from Beta Method)

Cylinder Embedment	15.75 ft
Axial load	3.23 k
Uplift load	27.75 k
Weight of shaft	12.52 k
Side Resistance Capacity	144.01 k

Lateral Load Calculation Results
(from Brom's Method)

Soil friction angle Φ	35.3°
Soil unit weight γ	120 pcf
Average $(N_1)_{60}$ over eff depth (BPF)	52
Effective lateral load on cylinder	3.61 k
Effective moment on cylinder	98.86 ft-k
Axial thrust from moment and vertical loads	32.59 k
Rankine Passive Pressure Coeff. K_P	6.46
Ultimate soil resistance P_{ult}	222.32 k
Allowable soil resistance P_{max}	103.39 k
Ultimate soil moment capacity M_{ult}	2515 ft-k
Allowable soil moment capacity M_{max}	1169 ft-k
Ground line moment	103 ft-k
Dist. from GL to 0 shear point in cyl.	3.11 ft
Maximum moment in shaft	119 ft-k



Nov 15 2024

1

BT9 - 12 of 13

Walpar © 2014

Box Truss Double Pole Structure Design

Job No : C3546 Structure No : OH-22 Station : 3027+15.32(WB)

Right Upright Cylindrical Footing Design

Concrete f'_c :	3000 psi	Concrete wgt :	150 pcf
Rebar yield f_y :	60000 psi	Min factor of safety for uplift :	1.00
Reinforcement Clear. :	3 in	Min factor of safety for lateral load :	2.86

Loads and Locations From Structure

Truss DL React (Rd)	5.13 k	Base to Truss Load Dim (H1)	28.29 ft
Upright DL React (Rv)	2.16 k	Base to Upright Load Dim (H2)	15.08 ft
Truss WL React (Rh)	6.21 k	Footing Projection at Ctr (H3)	1.25 ft
Upright WL React (Wv)	0.68 k	C/C of Cylinders (C)	4.75 ft

Normal Overturning Moment (M_{WL})	194.48 ft-k	Effective Hgt (H_{eff})	28.24 ft
Transverse Moment (M_{TL})	38.90 ft-k	Lateral Load (P_{eff})	3.41 k
Resultant Moment (M_R)	198.33 ft-k	Axial Force	5.46 k
Effective Overturning Moment	128.57 ft-k		

Final Cylindrical Footing Design Sizes

Req'd area of steel (A_s)	6.47 in²	Rebar Cage Dia (D1)	22.00 in
1% Cyl Area Min (A_m)	7.07 in²	Vertical bar spacing	7.68 in
Actual Reinf Area (A_p)	7.11 in²		

USE 30 in DIA x 15'- 0 CYLINDER
w/ 9- # 8 VERT. BARS & 16 - #4 HOOPS

Serviceability	Quantities
Calculated lateral safety factor = 25.4	847 lbs of reinforcement
Calculated uplift safety factor = 3.9	5.45 cyd of concrete

Side Shear Results
(from Alpha Method)

Cylinder Embedment	13.75 ft
Axial load	3.64 k
Uplift load	27.07 k
Weight of shaft	11.04 k
Side Resistance Capacity	105.24 k

Lateral Load Calculation Results
(from Brom's Method)

Soil friction angle Φ	12.2°
Soil unit weight γ	96 pcf
Average $(N_1)_{60}$ over eff. depth (BPF)	28
Effective lateral load on cylinder	3.41 k
Effective moment on cylinder	96.42 ft-k
Axial thrust from moment and vertical loads	32.53 k
Rankine Passive Pressure Coeff. K_P	30.25
Ultimate soil resistance P_{ult}	421.72 k
Allowable soil resistance P_{max}	196.12 k
Ultimate soil moment capacity M_{ult}	2885 ft-k
Allowable soil moment capacity M_{max}	1341 ft-k
Ground line moment	101 ft-k
Dist. from GL to 0 shear point in cyl.	2.56 ft
Maximum moment in shaft	114 ft-k



Nov 15 2024

1

BT9 - 13 of 13

Walpar © 2014